AOC

AOC AUTOMATIC LUBRICATION SYSTEM FOR PLAN51 OF MECHANICAL SEAL





PRODUCT FEATURES

- It is easy to install and operate, and can achieve automatic oil injection.
- The environmentally friendly AOC can be refueled and reused for multiple times, with lower costs.
- Design: The spring is located at the lower end, reducing the oil separation.
- The oiling cycle is determined by the tightness of the knob and the viscosity of the grease.
- Add lubricantion: Re-fill the lubricant through the grease injection port.

APPLICABLE INDUSTRIES

- Process pumps
- Wind power plants
- Steel mills
- Water treatment plants
- Petrochemical industry

PRODUCT APPLICATION

The AOC can ensure that your equipment is always in a well-lubricated state. Every minute, every second throughout the 365 days of a year, it can provide fresh lubricants for the bearings, gears, racks, chains, sprockets, tracks, and lead screws on your equipment.

Can replace API Plan 51.

NO.	Name	Material
1	Grease injector	/
2	Nut	S30408
3	Nipple	S30408
4	Bracket	S30408
5	Hose couping	S30408

SYSTEM PARAMETERS

Storage tank volume	150ML
Pressure	5Bar

SYSTEM MATERIALS

Main material	Aluminum + Plastic

OPERATION AND USE

- Remove the oil nozzle and check if there is any blockage
- For 0# or 1# grease, open at least one circle; for 2# grease, open two circles
- Ensure that the grease is properly injected and make an appropriate fine adjustment
- Suitable for single-point greasing, with a maximum installation distance of no more than 0.5 meters

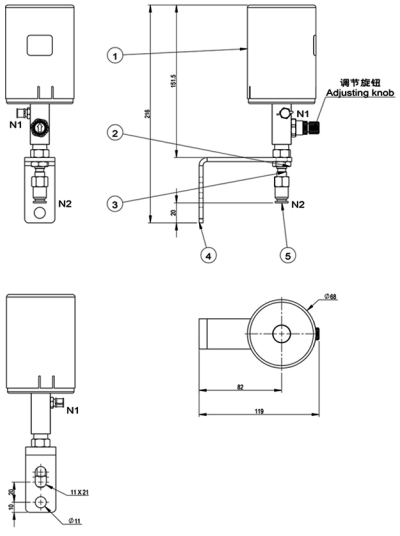

FBU SEALING TECHNOLOGY（SUZHOU）CO.,LTD

No.183, Yinhe Road, High Tech Industrial Development Zone Changshu Suzhou, Jiangsu, 215533

+86-512-57011188

sale@fbuseals.com

www.fbuseals.com

FBU is certified to API Q1, ISO 9001, ISO 14001